Safety Limit Switch
D4B-□N

Snap-action contact with approved direct opening operation certification ⊖.

Maintenance, seal, and resistance to shock increased and direct opening mechanism added.

Three-conduit switches and 2NC switches are also available.

- Direct opening mechanism (NC contacts only) added to enable opening contacts when faults occur, such as fused contacts.
- Wide standard operating temperature range: –40°C to 80°C (standard type).
- Safety of lever settings ensured using a mechanism that engages a gear between the operating position indicator plate and the lever.
- Equipped with a mechanism that indicates the applicable operating zone, as well as push-button switching to control left and right motion.
- Approved standards: UL, CSA, EN (TÜV), SUVA, BIA, and CCC.
- Head seal structure strengthened to improve seal properties (TÜV: IEC IP67, UL: NEMA 3, 4, 4X, 6P, and 13).
- Models with gold-plated contacts added to the series to enable handling microloads.

Note: Contact your sales representative for details on models with safety standard certification.

Model Number Structure

■ Model Number Legend

D4B-□□□□N
1 2 3

1. Conduit
- 1: PG13.5 (1-conduit)
- 2: G1/2 (PF1/2) (1-conduit)
- 3: 1/2-14NPT (1-conduit)
- 5: PG13.5 (3-conduit)
- 6: G1/2 (PF1/2) (3-conduit)
- 7: 1/2-14NPT (3-conduit)

2. Built-in Switch
- 1: 1NC/1NO (snap-action)
- 3: 1NC/1NO (slow-action) gold-plated contacts
- 5: 1NC/1NO (slow-action) (see note)
- 6: 1NC/1NO (slow-action) gold-plated contacts (see note)
- A: 2NC (slow-action)
- B: 2NC (slow-action) gold-plated contacts

Note: Excluding D4B-□□81N and D4B-□□87N models.

3. Actuator
- 00: Switch box (without head)
- 11: Roller lever (resin roller)
- 15: Roller lever (stainless steel roller)
- 1R: Roller lever (conventional D4B-compatible)
- 16: Adjustable roller lever
- 17: Adjustable rod lever
- 70: Top plunger
- 71: Top roller plunger
- 81: Coil spring
- 87: Plastic rod

Ordering Information

■ Set Model Numbers

Safety Limit Switches

Actuator	Conduit openings	Model		
		1NC/1NO (Snap-action)	1NC/1NO (Slow-action)	2NC (Slow-action)
Roller lever (resin roller)	Pg13.5	D4B-1111N	D4B-1511N	D4B-1A11N
	G1/2 (PF1/2)	D4B-2111N	D4B-2511N	D4B-2A11N
	1/2-14NPT	D4B-3111N	D4B-3511N	D4B-3A11N
	Pg13.5 (3-conduit)	D4B-5111N	D4B-5511N	D4B-5A11N
	G1/2 (3-conduit)	D4B-6111N	D4B-6511N	D4B-6A11N
	1/2-14NPT (3-conduit)	D4B-7111N	D4B-7511N	D4B-7A11N
Roller lever (stainless steel roller)	Pg13.5	D4B-1115N	D4B-1515N	D4B-1A15N
	G1/2 (PF1/2)	D4B-2115N	D4B-2515N	D4B-2A15N
	1/2-14NPT	D4B-3115N	D4B-3515N	D4B-3A15N
	Pg13.5 (3-conduit)	D4B-5115N	D4B-5515N	D4B-5A15N
Top plunger	Pg13.5	D4B-1170N	D4B-1570N	D4B-1A70N
	G1/2 (PF1/2)	D4B-2170N	D4B-2570N	D4B-2A70N
	1/2-14NPT	D4B-3170N	D4B-3570N	D4B-3A70N
	Pg13.5 (3-conduit)	D4B-5170N	D4B-5570N	D4B-5A70N
	G1/2 (3-conduit)	D4B-6170N	D4B-6570N	D4B-6A70N
	1/2-14NPT (3-conduit)	D4B-7170N	D4B-7570N	D4B-7A70N
Top roller plunger	Pg13.5	D4B-1171N	D4B-1571N	D4B-1A71N
	G1/2 (PF1/2)	D4B-2171N	D4B-2571N	D4B-2A71N
	1/2-14NPT	D4B-3171N	D4B-3571N	D4B-3A71N
	Pg13.5 (3-conduit)	D4B-5171N	D4B-5571N	D4B-5A71N
	G1/2 (3-conduit)	D4B-6171N	D4B-6571N	D4B-6A71N
	1/2-14NPT (3-conduit)	D4B-7171N	D4B-7571N	D4B-7A71N

General-purpose Limit Switches

Actuator	Conduit openings	Model		
		1NC/1NO (Snap-action)	1NC/1NO (Slow-action)	2NC (Slow-action)
Adjustable roller lever	Pg13.5	D4B-1116N	D4B-1516N	D4B-1A16N
	G1/2 (PF1/2)	D4B-2116N	D4B-2516N	D4B-2A16N
	1/2-14NPT	D4B-3116N	D4B-3516N	D4B-3A16N
	Pg13.5 (3-conduit)	D4B-5116N	D4B-5516N	D4B-5A16N
	G1/2 (3-conduit)	D4B-6116N	D4B-6516N	D4B-6A16N
	1/2-14NPT (3-conduit)	D4B-7116N	D4B-7516N	D4B-7A16N
Adjustable rod lever	Pg13.5	D4B-1117N	D4B-1517N	D4B-1A17N
	G1/2 (PF1/2)	D4B-2117N	D4B-2517N	D4B-2A17N
	1/2-14NPT	D4B-3117N	D4B-3517N	D4B-3A17N
	Pg13.5 (3-conduit)	D4B-5117N	D4B-5517N	D4B-5A17N
	G1/2 (3-conduit)	D4B-6117N	D4B-6517N	D4B-6A17N
	1/2-14NPT (3-conduit)	D4B-7117N	D4B-7517N	D4B-7A17N
Coil spring (non-directional)	Pg13.5	D4B-1181N	---	D4B-1A81N
	G1/2 (PF1/2)	D4B-2181N		D4B-2A81N
	1/2-14NPT	D4B-3181N		D4B-3A81N
	Pg13.5 (3-conduit)	D4B-5181N		D4B-5A81N
	G1/2 (3-conduit)	D4B-6181N		D4B-6A81N
	1/2-14NPT (3-conduit)	D4B-7181N		D4B-7A81N
Plastic rod (non-directional)	Pg13.5	D4B-1187N		D4B-1A87N
	G1/2 (PF1/2)	D4B-2187N		D4B-2A87N
	1/2-14NPT	D4B-3187N		D4B-3A87N
	Pg13.5 (3-conduit)	D4B-5187N		D4B-5A87N
	G1/2 (3-conduit)	D4B-6187N		D4B-6A87N
	1/2-14NPT (3-conduit)	D4B-7187N		D4B-7A87N

Note: In addition to the above models, models compatible with the previous D4B Switches (with standard rotary levers) are available.
Model number examples: D4B-1□1RN(Pg13.5) or D4B-2□1RN(PF1/2)

■ Ordering Switches

Because the D4B-□N employs a block mounting construction, parts may be ordered as a complete assembled set or individually as replacement parts. Switches ordered as sets are assembled before shipping.

Note: Do not order combinations of only a Side Rotary Lever and Head or a Side Rotary Lever and Switch Box.

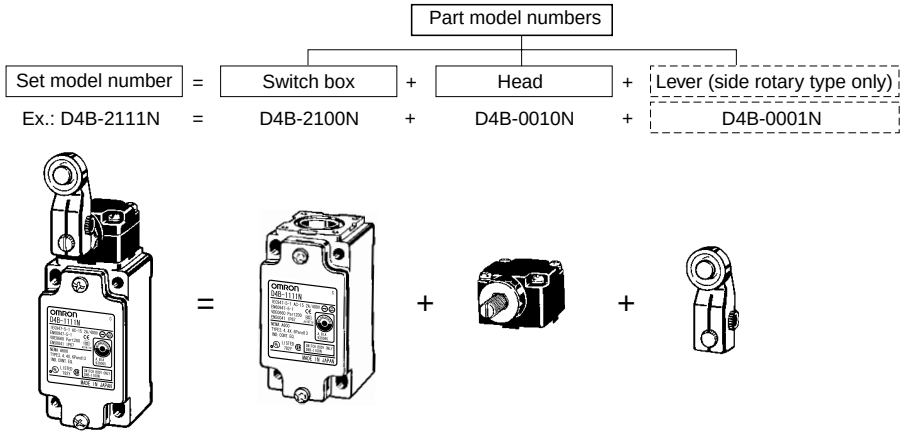

■ Replacement Parts

Switch Boxes

	1-conduit type			3-conduit type		
	PG13.5	**G1/2**	**1/2-14NPT**	**PG13.5**	**G1/2**	**1/2-14NPT**
1NC/1NO (Snap-action)	D4B-1100N	D4B-2100N	D4B-3100N	D4B-5100N	D4B-6100N	D4B-7100N
1NC/1NO (Slow-action)	D4B-1500N	D4B-2500N	D4B-3500N	D4B-5500N	D4B-6500N	D4B-7500N
2NC (Slow-action)	D4B-1A00N	D4B-2A00N	D4B-3A00N	D4B-5A00N	D4B-6A00N	D4B-7A00N

Operating Heads

Actuator	Type	Model
Side rotary	**Standard**	D4B-0010N
Top plunger	**Plain**	D4B-0070N
	Roller	D4B-0071N
Wobble lever	**Coil spring**	D4B-0081N
	Plastic rod	D4B-0087N

Levers (for Side Rotary Switches)

Actuator	Length (mm)	Diameter of roller	Model
Standard	31.5	17.5 dia.	D4B-0001N
Stainless steel roller lever	31.5	17.5 dia.	D4B-0005N
Adjustable roller lever	25 to 89	19 dia.	D4B-0006N
Adjustable rod lever	145 max.	---	D4B-0007N
Interchangeable with D4B-0001	33.7	19 dia.	D4B-000RN

Note: Other types of lever are also available.

Specifications

■ Standards and EC Directives

- Conforms to the following EC Directives:
  Machinery Directive
  Low Voltage Directive
  EN1088
  EN50041

■ Approved Standards

Snap-action Models

Agency	Standard	File No.
TÜV Rheinland	EN60947-5-1 (approved direct opening mechanism)	J9851083
	EN60947-5-1 (unapproved direct opening mechanism)	J50005477 (See note 1.)
UL	UL508	E76675
CSA	C22.2 No. 14	LR45746
BIA (See note 2.)	GS-ET-15	1-conduit: 9202158 3-conduit: 9309655
CQC (CCC)	GB14048.5	2003010305077612

Note: 1. Adjustable roller lever, adjustable rod lever, coil spring, and plastic rod models only.
2. Not including adjustable roller lever, adjustable rod lever, coil spring, and plastic rod models.

Slow-action Models

Agency	Standard	File No.
TÜV Rheinland	EN60947-5-1 (approved direct opening mechanism)	J9851083
	EN60947-5-1 (unapproved direct opening mechanism)	J50005477 (See note 1.)
UL	UL508	E76675
CSA	C22.2 No. 14	LR45746
BIA (See note.)	GS-ET-15	1-conduit: 9202158 3-conduit: 9309655
SUVA (See note.)	SUVA	1-conduit: E6188/1.d 3-conduit: E6189/1.d
CQC (CCC)	GB14048.5	2003010305077612

Note: 1. Adjustable roller lever, adjustable rod lever, coil spring, and plastic rod models only.
2. Not including adjustable roller lever, adjustable rod lever, coil spring, and plastic rod models.

■ Approved Standard Ratings

TÜV (EN60947-5-1), CCC (GB14048.5)

Utilization category	AC-15
Rated operating current (I_e)	2 A
Rated operating voltage (U_e)	400 V

Note: As protection against short-circuiting, use either a gI-type or gG-type 10-A fuse that conforms to IEC60269.

UL/CSA: (UL508, CSA C22.2 No. 14)

A600

Rated voltage	Carry current	Current		Volt-amperes	
		Make	Break	Make	Break
120 VAC 240 VAC 480 VAC 600 VAC	10 A	60 A 30 A 15 A 12 A	6 A 3 A 1.5 A 1.2 A	7,200 VA	720 VA

■ Ratings

Rated voltage (V)	Non-inductive load (A)				Inductive load (A)			
	Resistive load		Lamp load		Inductive load		Motor load	
	NC	NO	NC	NO	NC	NO	NC	NO
125 VAC	10		3	1.5	10		5	2.5
250	10		2	1	10		3	1.5
400	10		1.5	0.8	3		1.5	0.8
8 VDC	10		6	3	10		6	
14	10		6	3	10		6	
30	6		4	3	6		4	
125	0.8		0.2	0.2	0.8		0.2	
250	0.4		0.1	0.1	0.4		0.1	

Note: 1. The above values are continuous currents.
2. Inductive loads have a power factor of 0.4 or higher (AC) or a time constant of 7 ms or lower (DC).
3. Lamp loads have a inrush current of 10 times the normal current.
4. Motor loads have a inrush current of 6 times the normal current.

Inrush current	30 A max.

■ Characteristics

Item		Snap-action	Slow-action
Degree of protection		IP67 (EN60947-5-1)	
Durability (see note 4)	**Mechanical**	30,000,000 operations min.	10,000,000 operations min.
	Electrical	500,000 operations min. (at a 250 VAC, 10-A resistive load)	
Operating speed		1 mm/s to 0.5 m/s	
Operating frequency		Mechanical: 120 operations/min Electrical: 30 operations/min	
Rated frequency		50/60 Hz	
Insulation resistance		100 MΩ min. (at 500 VDC) between terminals of the same polarity and between each terminal and non-current-carrying part	
Contact resistance		25 mΩ max. (initial value)	
Dielectric strength (U_{imp})			
	Between terminals of same polarity	U_{imp} 2.5 kV	U_{imp} 4 kV
	Between terminals of different polarity	---	U_{imp} 4 kV
	Between current-carrying metal parts and ground	U_{imp} 4 kV	U_{imp} 4 kV
	Between each terminal and non-current-carrying parts	U_{imp} 4 kV	U_{imp} 4 kV
Rated insulation voltage (U_i)		600 VAC (EN60947-5-1)	
Counter electromotive voltage at switching		1,500 VAC max. (EN60947-5-1)	
Operating environmental pollution level		3 (EN60947-5-1)	
Conditional short-circuit current		100 A (EN60947-5-1)	
Conventional enclosed thermal current (I_{the})		20 A (EN60947-5-1)	
Electric shock protection class		Class I (with ground terminal)	
Vibration resistance		Malfunction: 10 to 55 Hz, 0.75 mm single amplitude	
Shock resistance		Destruction: 1,000 m/s^2 min. Malfunction: 300 m/s^2 min.	
Ambient temperature		Operating: –40°C to 80°C (with no icing) (see note 5)	
Ambient humidity		Operating: 95% max.	
Weight		Approx. 250 g	

Note: 1. The above values are initial values.
2. The above values may vary depending on the model. Consult your OMRON sales representative for details.
3. The degree of protection is tested using the method specified by the standard (EN60947-5-1). Confirm that sealing properties are sufficient for the operating conditions and environment beforehand.
4. The durability is for an ambient temperature of 5°C to 35°C and ambient humidity of 40% to 70%. For further conditions, consult your OMRON sales representative.
5. –25°C to 80°C for the flexible-rod type.

Connections

■ Contact Form (EN50013)

Model	Contact		Diagrams	Explanation
D4B-□1□N	1NC/1NO (Snap-action)	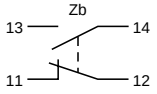		Only NC contact 11-12 has an approved direct opening mechanism. ⊖ Terminal numbers 11-12 and 13-14 cannot be used as unlike poles.
D4B-□5□N	1NC/1NO (Slow-action)	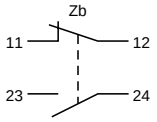	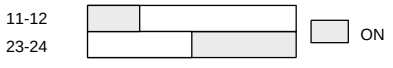	Only NC contact 11-12 has an approved direct opening mechanism. ⊖ Terminal numbers 11-12 or 23-24 can be used as unlike poles.
D4B-□A□N	2NC (Slow-action)	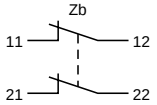	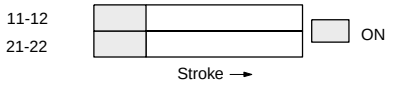	Both NC contacts 11-12 and 21-22 have an approved direct opening mechanism. ⊖ Terminal numbers 11-12 and 21-22 can be used as unlike poles.

Note: Terminal numbers are according to EN50013; contact symbols are according to IEC60947-5-1.

Operation

■ Direct Opening Mechanism

1NO/1NC Contact (Snap-action)

Conforms to EN60947-5-1 Direct Opening ⊖ (Only NC contact has a direct opening mechanism.)

1. When contact welding occurs.

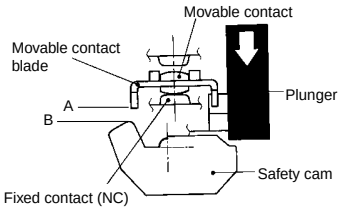

2. When contacts are being pulled apart.

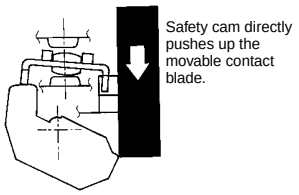

3. When contacts are completely pulled apart.

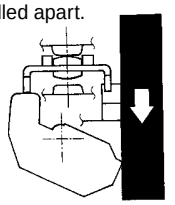

1NC/1NO Contact (Slow-action)

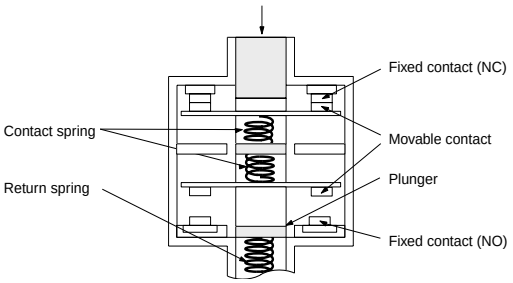

Conforms to EN60947-5-1 Direct Opening ⊖
(Only NC contact has a direct opening mechanism.)
When contact welding occurs, the contacts are separated from each other by the plunger being pushed in.

2NC Contact (Slow-action)

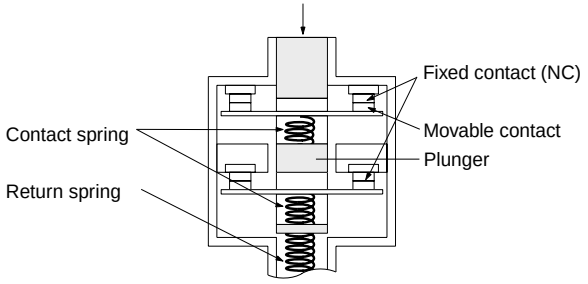

Conforms to EN60947-5-1 Direct Opening ⊖
(Only NC contact has a direct opening mechanism.)

Nomenclature

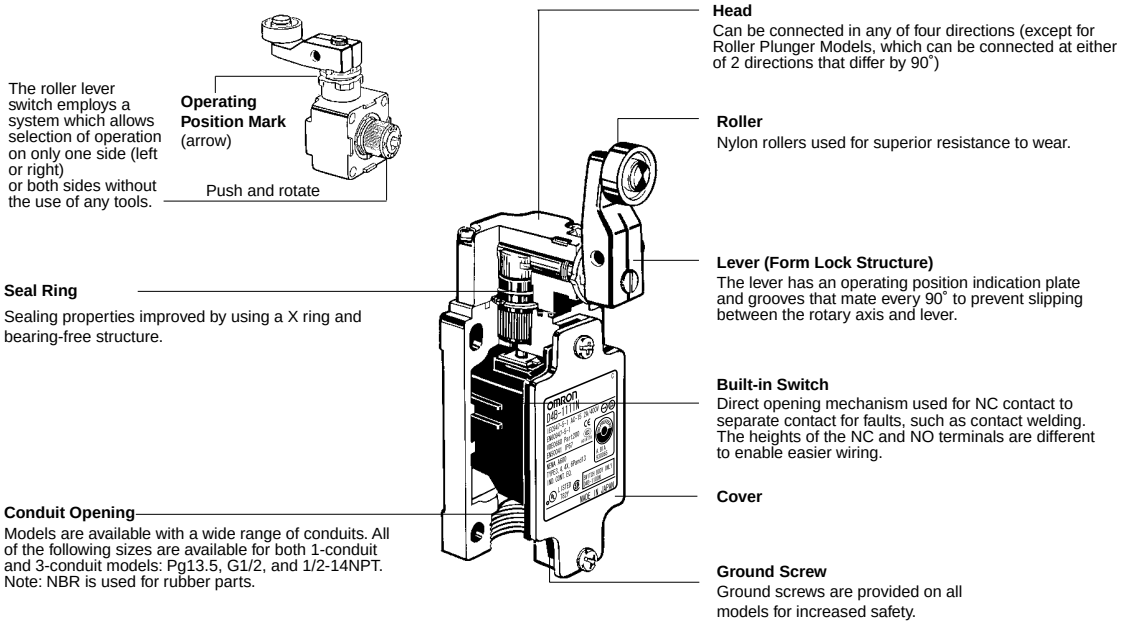

Engineering Data

Electrical Durability (Snap-action)

(cosϕ = 1)

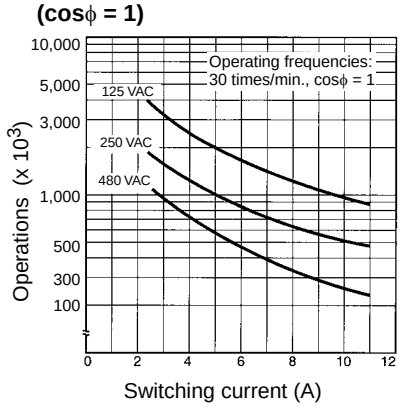

(cosϕ = 0.4)

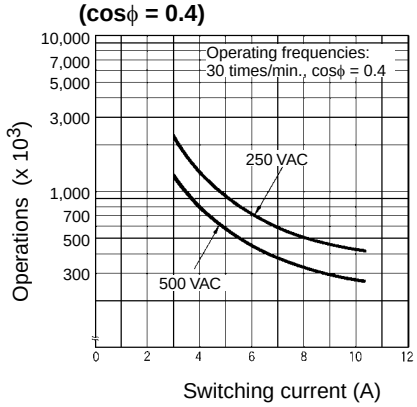

Dimensions

Note: 1. All units are in millimeters unless otherwise indicated.

2. Unless otherwise specified, a tolerance of ±0.4 mm applies to all dimensions.

3. When placing your order, specify the conduit type by adding a code from the list below to the blank box of the following model numbers as shown below.

Standard Switches	3-conduit Switches
1: PG 13.5	5: PG 13.5
2: G 1/2	6: G 1/2
3: 1/2-14NPT	7: 1/2-14NPT

4. Omitted dimensions are the same as those for the Rotary Level Type Models D4B-1□□□N and D4B-5□□□N have a PG13.5 conduit opening. D4B-2□□□N and D4B-6□□□N have a G1/2 conduit opening. D4B-3□□□N and D4B-7□□□N have a 1/2-14NPT conduit opening.

■ Switches

Roller Lever

D4B-□□11N

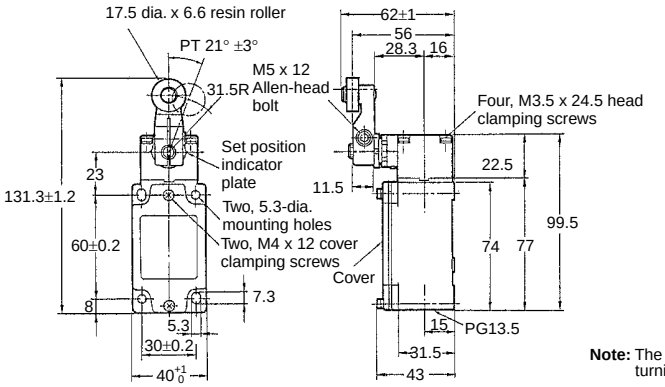

Note: The lever can be set to any desired position by turning the operating position indicator.

Roller Lever

D4B-□□15N

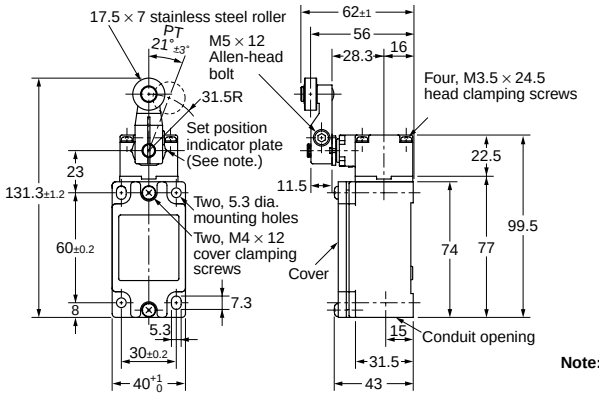

Note: The lever can be set to any desired position by turning the operating position indicator.

Adjustable Roller Lever

D4B-□□16N

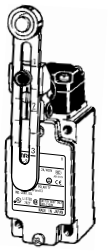

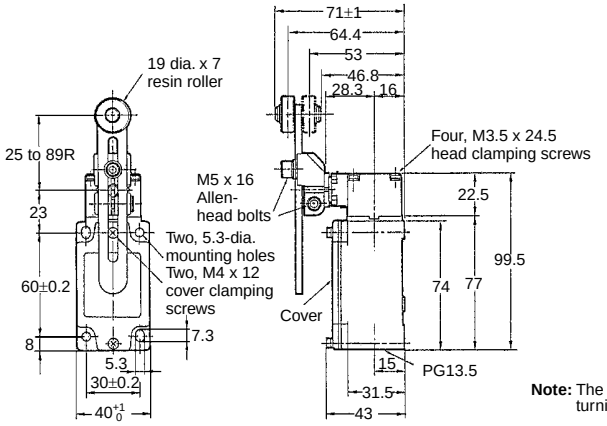

Note: The lever can be set to any desired position by turning the operating position indicator.

Adjustable Rod Lever

D4B-□□17N

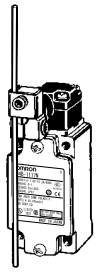

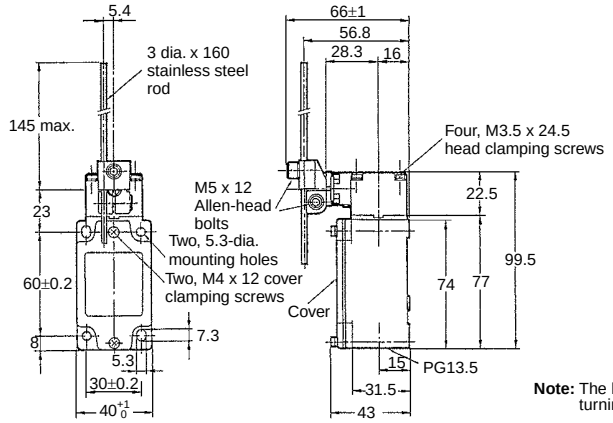

Note: The lever can be set to any desired position by turning the operating position indicator.

Note: Unless otherwise specified, a tolerance of ±0.4 mm applies to all dimensions.

Operating characteristic		D4B-□□11N	D4B-□□15N	D4B-□□16N (See note 2.)	D4B-□□17N (See note 3.)
Operating force	OF max.	9.41N	9.41N	9.41N	2.12N
Release force	RF min.	1.47N	1.47N	1.47N	0.29N
Positive travel	PT	21°±3°	21°±3°	21°±3°	21°±3°
	PT (2nd) (See notes 4, 6.)	(45°)	(45°)	(45°)	(45°)
Overtravel	OT min.	50°	50°	50°	50°
Movement deviation	MD max. (See note 5.)	12°	12°	12°	12°
Direct opening travel	DOT min. (See notes 4, 7.)	35°	35°	35°	35°
	(See notes 5, 7.)	55°	55°	55°	55°
Direct opening force	DOF min. (See note 7.)	19.61N	19.61N	19.61N	19.61N
Total travel	TT (See note 6.)	(75°)	(75°)	(75°)	(75°)

Note: 1. Variation occurs in the simultaneity of contact opening/closing operations of 2NC contacts. Check contact operation.
2. The operating characteristics of these Switches were measured with the roller level set at 31.5 mm.
3. The operating characteristics of these Switches were measured with the rod level set at 140 mm.
4. Only for slow-action models.
5. Only for snap-action models.
6. Reference values.
7. Must be provided to ensure safe operation.

Top Plunger

D4B-□□70N

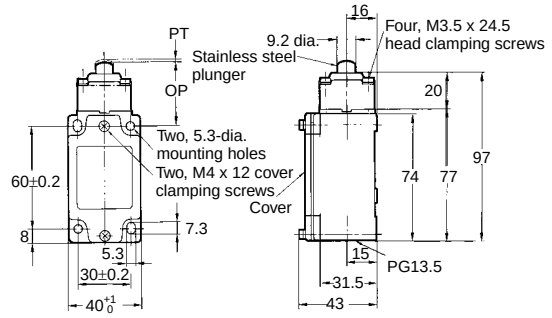

Top Roller Plunger

D4B-□□71N

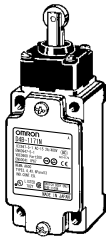

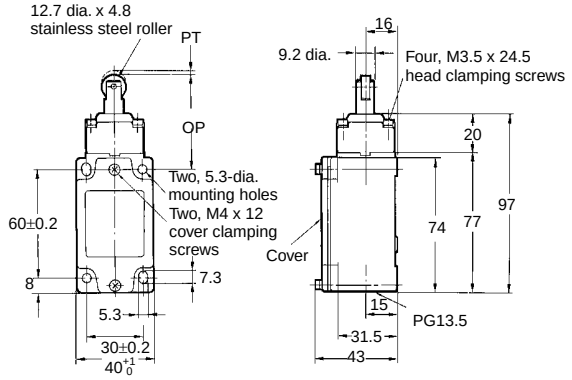

Note: Unless otherwise specified, a tolerance of ±0.4 mm applies to all dimensions.

Operating characteristic		D4B-□□70N	D4B-□□71N
Operating force	OF max.	18.63 N	18.63 N
Release force	RF min.	1.96 N	1.96 N
Positive travel	PT	2 mm	2 mm
	PT (2nd) (See notes 2, 4.)	(3 mm)	(3 mm)
Overtravel	OT min.	5 mm	5 mm
Movement deviation	MD max. (See note 3.)	1 mm	1 mm
Direct opening travel	DOT min. (See notes 5.)	3.2 mm	3.2 mm
Direct opening force	DOF min. (See note 5.)	49.03 N	49.03N
Total travel	TT (See note 4.)	(7 mm)	(7 mm)
Free position	FP max.	38 mm	51 mm
Operating position	OP	35±1 mm	48±1 mm

Note: 1. Variation occurs in the simultaneity of contact opening/closing operations of 2NC contacts. Check contact operation.
2. Only for slow-action models.
3. Only for snap-action models.
4. Reference values.
5. Must be provided to ensure safe operation.

Coil Spring (Non-directional)

D4B-□□81N

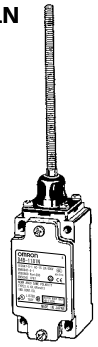

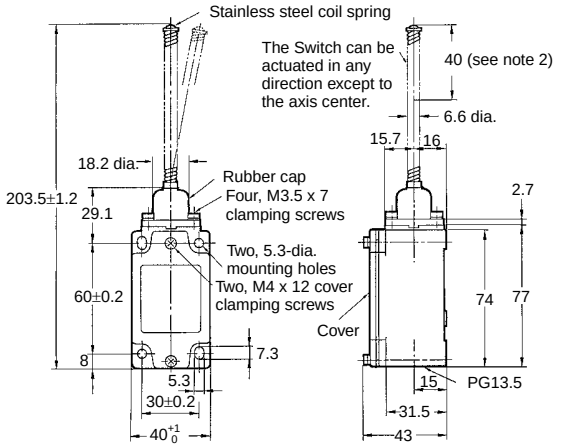

Mechanically speaking, these models are general limit switches and not safety limit switches.

Note: Be sure to adjust the dog to within 40 mm from the top end of the coil spring.

Plastic Rod (Non-directional)

D4B-□□87N

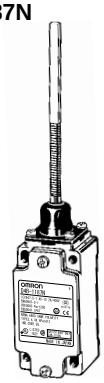

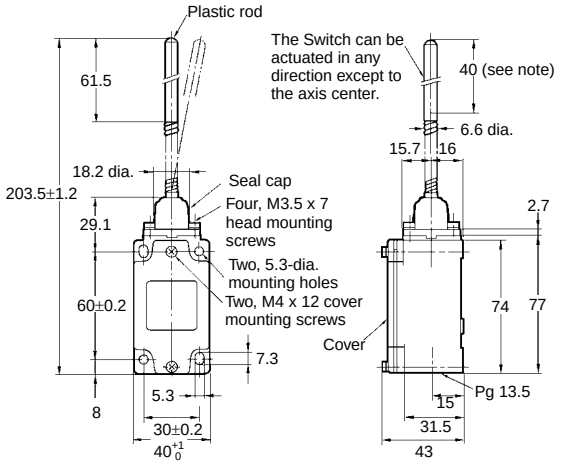

Mechanically speaking, these models are general limit switches and not safety limit switches.

Note: Be sure to adjust the dog to within 40 mm from the top end of the plastic rod.

Note: Unless otherwise specified, a tolerance of ±0.4 mm applies to all dimensions.

Operating characteristic		D4B-□□81N	D4B-□□87N
Operating force	OF max.	1.47 N	1.47 N
Positive travel	PT max.	15°	15°

Note: Variation occurs in the simultaneity of contact opening/closing operations of 2NC contacts. Check contact operation.

3-conduit Switches

Roller Lever

D4B-□□11N

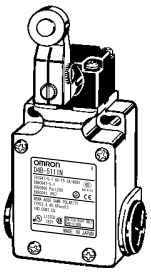

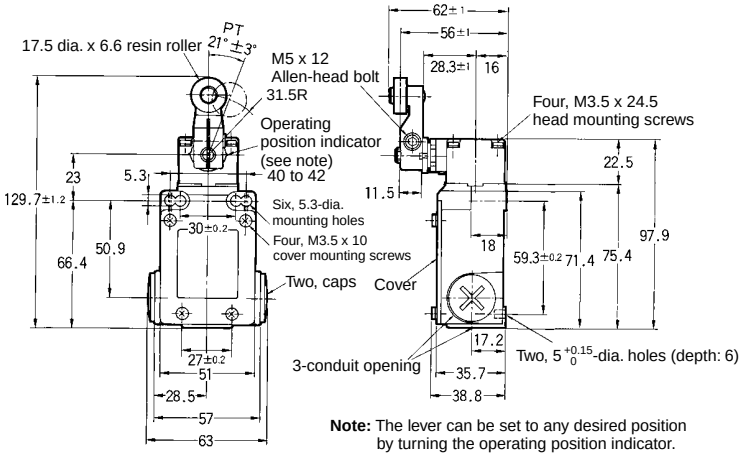

Note: The lever can be set to any desired position by turning the operating position indicator.

Roller Lever

D4B-□□15N

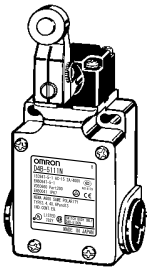

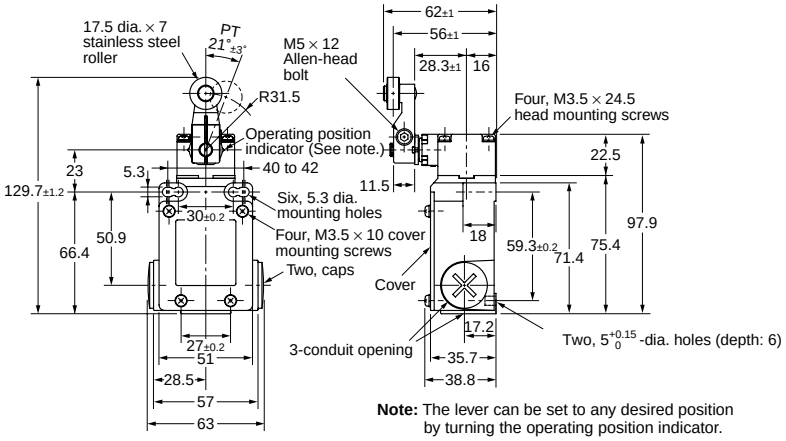

Note: The lever can be set to any desired position by turning the operating position indicator.

Adjustable Roller Lever

D4B-□□16N

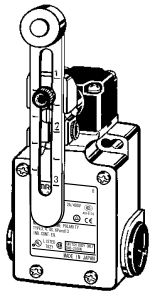

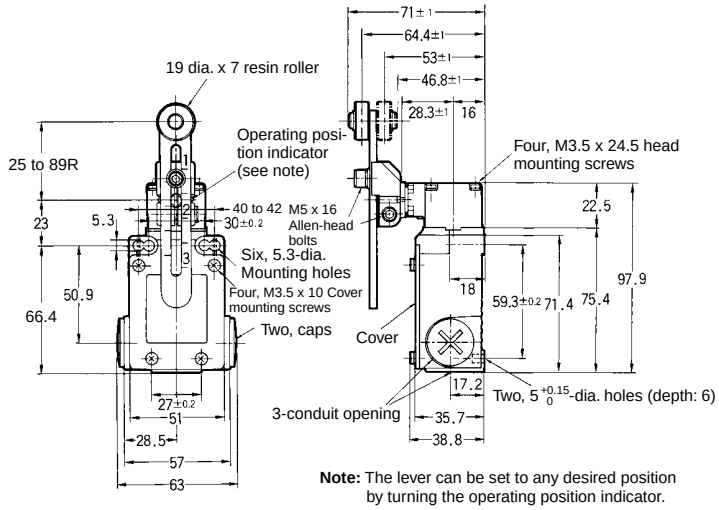

Note: The lever can be set to any desired position by turning the operating position indicator.

Adjustable Rod Lever

D4B-□□17N

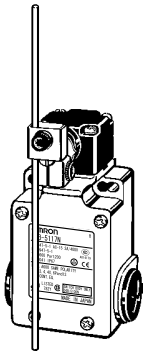

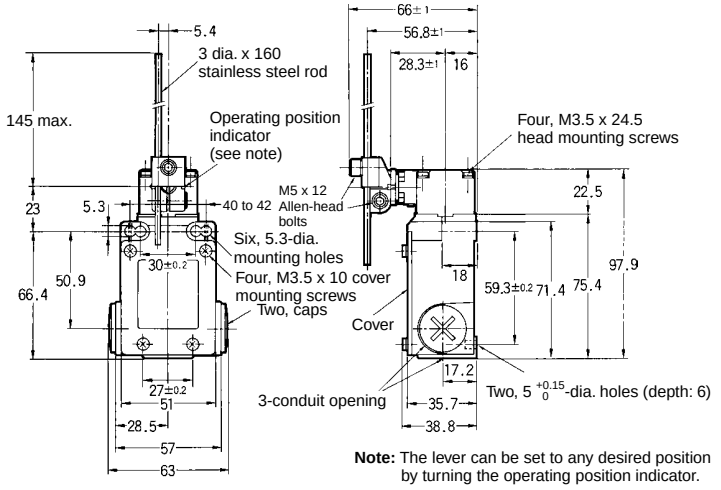

Note: The lever can be set to any desired position by turning the operating position indicator.

Note: Unless otherwise specified, a tolerance of ±0.4 mm applies to all dimensions.

Operating characteristic		D4B-□□11N	D4B-□□15N	D4B-□□16N (See note 2.)	D4B-□□17N (See note 3.)
Operating force	OF max.	9.41 N	9.41 N	9.41 N	2.12 N
Release force	RF min.	1.47 N	1.47 N	1.47 N	0.29 N
Positive travel	PT	21°±3°	21°±3°	21°±3°	21°±3°
	PT (2nd) (See notes 4, 6.)	(45°)	(45°)	(45°)	(45°)
Overtravel	OT min.	50°	50°	50°	50°
Movement deviation	MD max. (See note 5.)	12°	12°	12°	12°
Direct opening travel	DOT min. (See notes 4, 7.)	35°	35°	35°	35°
	(See notes 5, 7.)	55°	55°	55°	55°
Direct opening force	DOF min. (See note 7.)	19.61 N	19.61 N	19.61 N	19.61 N
Total travel	TT (See note 6.)	(75°)	(75°)	(75°)	(75°)

Note: 1. Variation occurs in the simultaneity of contact opening/closing operations of 2NC contacts. Check contact operation.
2. The operating characteristics of these Switches were measured with the roller level set at 31.5 mm.
3. The operating characteristics of these Switches were measured with the rod level set at 140 mm.
4. Only for slow-action models.
5. Only for snap-action models.
6. Reference values.
7. Must be provided to ensure safe operation.

Top Plunger
D4B-□□70N

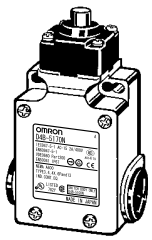

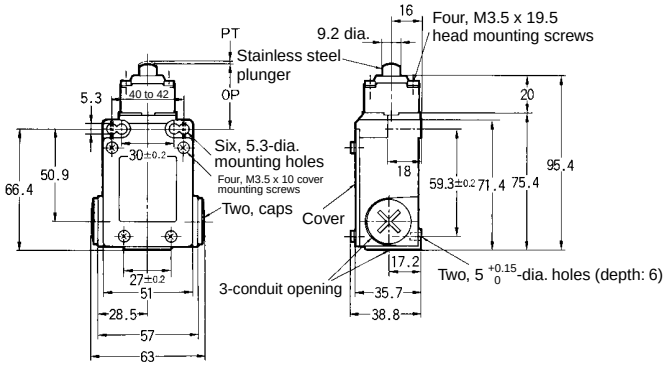

Top Roller Plunger
D4B-□□71N

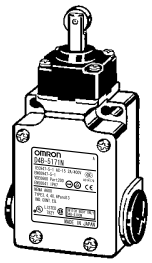

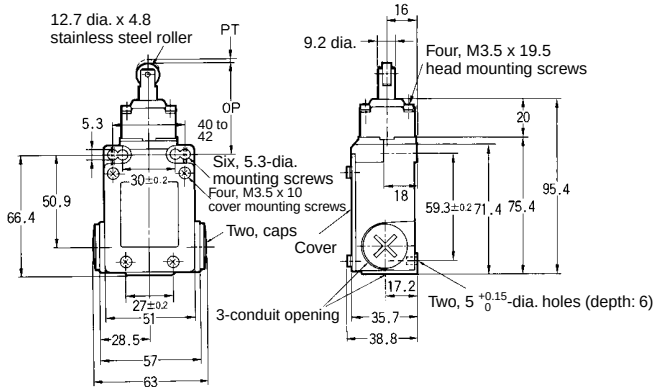

Note: Unless otherwise specified, a tolerance of ±0.4 mm applies to all dimensions.

Operating characteristic		D4B-□□70N	D4B-□□71N
Operating force	OF max.	18.63 N	18.63 N
Release force	RF min.	1.96 N	1.96 N
Positive travel	PT	2 mm	2 mm
	PT (2nd) (See notes 2, 4.)	(3 mm)	(3 mm)
Overtravel	OT min.	5 mm	5 mm
Movement deviation	MD max. (See note 3.)	1 mm	1 mm
Direct opening travel	DOT min. (See notes 5.)	3.2 mm	3.2 mm
Direct opening force	DOF min. (See note 5.)	49.03 N	49.03N
Total travel	TT (See note 4.)	(7 mm)	(7 mm)
Free position	FP max.	38 mm	51 mm
Operating position	OP	35±1 mm	48±1 mm

Note: 1. Variation occurs in the simultaneity of contact opening/closing operations of 2NC contacts. Check contact operation.
2. Only for slow-action models.
3. Only for snap-action models.
4. Reference values.
5. Must be provided to ensure safe operation.

Coil Spring
D4B-□□81N

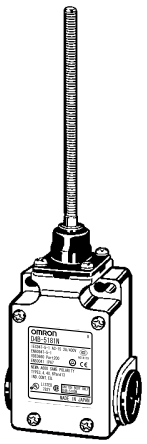

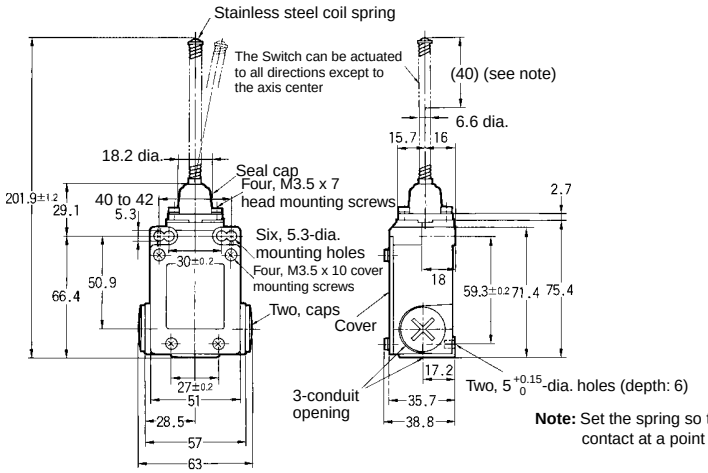

Note: Set the spring so that the dog comes in contact at a point 40 mm from the tip.

Plastic Rod
D4B-□□87N

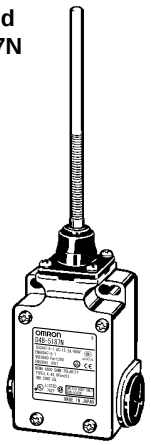

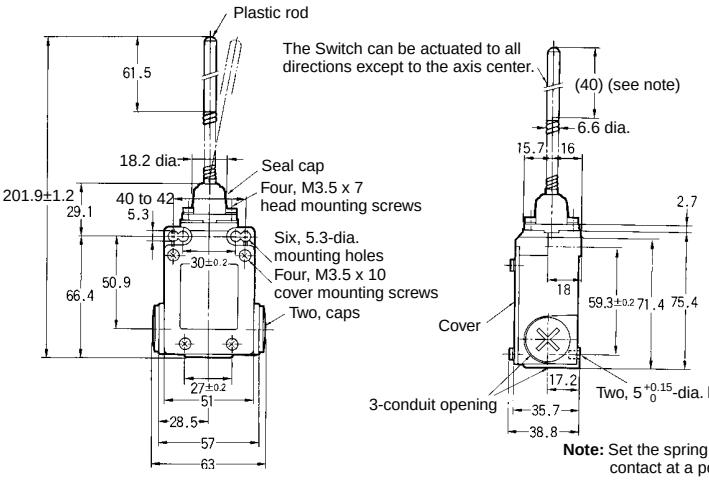

Note: Set the spring so that the dog comes in contact at a point 40 mm from the tip.

Note: Unless otherwise specified, a tolerance of ±0.4 mm applies to all dimensions.

Operating characteristic		D4B-□□81N	D4B-□□87N
Operating force	OF max.	1.47 N	1.47 N
Positive travel	PT max.	15°	15°

Note: Variation occurs in the simultaneity of contact opening/closing operations of 2NC contacts. Check contact operation.

Roller Lever
WL-1A400

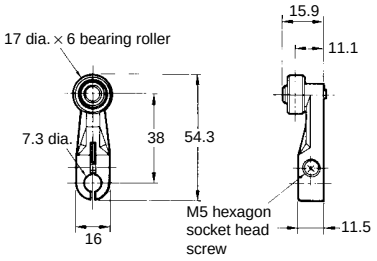

Note: Reverse the indicator plate when mounting.

Adjustable Rod Lever
WL-3A100

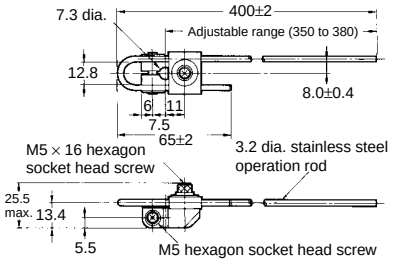

Note: Reverse the indicator plate when mounting.

Spring Rod Lever
WL-4A201

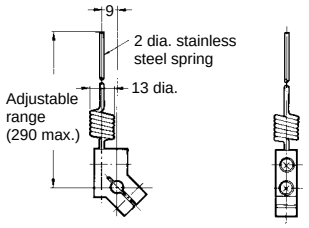

Note: Reverse the indicator plate when mounting.

Resin Loop Lever
D4A-F00

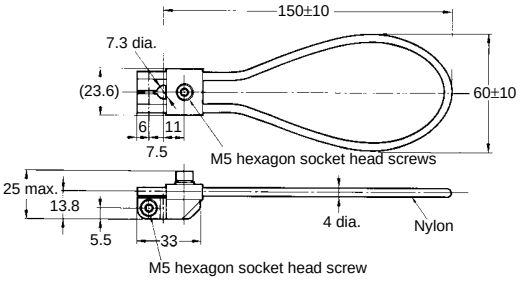

Note: Reverse the indicator plate when mounting.

Note: 1. Unless otherwise specified, a tolerance of ±0.4 mm applies to all dimensions.
2. Safety Limit Switch specifications are satisfied with D4B-□□□□AN Levers only (example: D4B-0001N).